PRABHAT ACADEMY
DARKNESS TO LIGHT
LUCKNOW

Dear Parents,

The holiday season, often associated with joy and relaxation, also presents a golden opportunity through homework for meaningful engagement with learning and creative exploration. Designed to nurture creativity and critical thinking, the allocated assignments and tasks are structured to be engaging and cultivating deeper understanding.

Guidelines for completion:

1. All homework should be completed in a thin notebook (subject-wise), unless specified otherwise.
2. The work must be original. Ready-made materials should be avoided.
3. The holiday homework will be graded, and marks will be added to the subject enrichment score.

Celebrate the special Bond!

Father's Day: On Father's Day, take the opportunity to create heartfelt memories with your father. Spend time with your father, make him feel special and let him know how much he is valued and loved.

Embodying Magnanimity

Show compassion for the voiceless by placing a bowl of fresh water outside your home to offer respite to birds and stray animals in the summer heat.

Learn, create and return inspired! Regards

Prabhat Academy

HOLIDAY HOMEWORK
GRADE: VII

ENGLISH

- Use a single line notebook for English homework.
- Cover it neatly.

1. **Caption Writing**

   Click 5 random pictures of day to day life scenes and caption them.

2. **Imagine and write**

   Imagine you find a magical pencil that makes anything you draw become real. Write a story in 120–150 words.

3. **Travel Blog in a shoebox**

   - Decorate a shoe box as a mini museum of a real or fictional place visited during break.
   - Inside souvenirs or handmade mini props.
   - On the lid's underside paste a 200 words first person blog post describing the trip including one simile and one metaphor.

4. Read the extra reading book **"The adventures of Huckleberry Finn"** and create a mind map of a chapter you liked the most.

   - Use colours images and keywords to represent each event or incident.
   - Include key moments, characters and settings that stood out to you.
   - Use an A4 size colourful sheet.

HINDI

* **कार्य अपनी हिंदी की कॉपी पर करें।**
* **कार्य सुंदर लिखाई में करें।**
* **ग्रीष्मावकाश में आप प्रतिदिन सुबह उठकर अपने घर की छत पर अथवा घर के आंगन में पशु पक्षियों के लिए दाना और पीने के लिए पानी अवश्य रखिए।**

1) सौरमंडल के ग्रहों के नाम हिंदी में लिख कर उनमें से किसी एक का चित्र बनाकर उसके बारे में बताते हुए चार पंक्तियाँ लिखिए।

2) पेड़ को काटने के लिए उस पर कोई कुल्हाड़ी से वार करे तो पेड़ की क्या प्रतिक्रिया होगी? पेड़ के मन में आने वाले भावों को पाँच से छ: पंक्तियों में लिखिए तथा पेड़ को गले लगाकर चित्र खींचें।

3. **सही मुहावरे से वाक्य पूरा करें:**

क) कमल को बड़ों की बातों में _____ की आदत है।
ख) महेश हमेशा दूसरों के _____ रहता है।
ग) पता नहीं दीपक को क्या हो गया है वह छोटी-छोटी बात पर _____ हो जाता है।

घ) निम्नलिखित कथन के अर्थ को प्रकट करने वाले मुहावरे लिखिए:
i) धोखा देना -
ii) गंगा नहाना -
iii) पत्थर की लकीर –

4. **आओ यह भी जानें:**

क) भारत रत्न किस पत्ती के आकार का है -
ख) विश्व की सबसे बड़ी दीवार -
ग) सफेद हाथियों का देश है -
घ) सबसे कठोर कानून वाला देश -
ङ) नदियों का देश -
च) भूटान का राष्ट्रीय पशु -

MATHEMATICS

"For the things of this world cannot be made known without a knowledge of Mathematics"
Roger Bacon

General Instructions:

- Part A is the project.
- Part B is the revision sheet, which is recapitulation of the work which has been done so far.
- Do the revision worksheet on a separate thin notebook.
- Attempt all the questions neatly and in serial order.

Part A

Project Work

● **Prepare a timeline of different discoveries and inventions made in the field of time measurement, paste appropriate pictures and cutting also for better explanation.**

Project Instructions for Students

Project 1: Timeline of Time Measurement Inventions and Discoveries.

1. Research: Research different discoveries and inventions in the field of time measurement, such as sundials, water clocks, mechanical clocks, quartz clocks, and atomic clocks.

2. Create a Timeline: Create a timeline highlighting the key discoveries and inventions, including dates and brief descriptions.

3. Add Pictures: Paste or draw pictures to illustrate each discovery or invention.

4. Organize: Organize the timeline in chronological order.

● **Make a sand clock using sand, used plastic bottles and cardboard.**

Project 2: Sand Clock

1. Materials: Gather materials, including two used plastic bottles, sand, cardboard, glue or tape, and a small hole drill or sharp object.

2. Create a Hole: Drill a small hole in the bottom of one bottle and the top of the other.

3. Fill with Sand: Fill one bottle with sand, leaving about an inch at the top.

4. Assemble the Clock: Glue or tape the bottles together, with the hole in the top bottle aligned with the hole in the bottom bottle.

5. Add Cardboard Base: Attach a cardboard base to stabilize the clock.

Tips and Requirements

1. Creativity: Use creativity and imagination in designing the timeline and sand clock.

2. Accuracy: Ensure accuracy in research and representation of historical dates and facts.

3. Neatness: Maintain neatness and organisation in the project work.

Part B

Q1. Fill in the blanks

1. _____is the additive identity and _____is the multiplicative identity of integers.
2. (-31) + ____ = 0
3. [(-7) + 9] + (_____) =9 + [-7 + 4]
4. 48.75 ÷ 100 = _____
5. 1.1 × 0.1 × 0.01 = _____
6. ____ × $\frac{3}{7}$ = 1
7. 7.005 × 100 =_____

Q2. A man travelled 30km east of a place A and reached B. From B he travelled 60km west of B and reached C. Find the distance of C from A.

Q3. A man has ₹ 20000 I his account in a bank. He withdraws ₹3000 per month for the first two months and deposits double of this amount on third month. What will be the balance in his account after 3 months?

Q4. Verify a – (-b) = a + b for the following values of a and b.

i) a = -17, b = 15

Q5. Use >, < or = symbols in the blank space in each of the following.

i) (-3) – (-5) _____(-4) + (-9)
ii) 71 – 2 – 31_____71 – (-2) +32

Q6. Write down a pair of integers whose:

i) Sum is -6.
ii) Difference is -8.

Q7. Write a negative integer and a positive integer whose:

i) Sum is -9
ii) Difference is -4

Q8. A milkman sell 42 litres of milk at ₹ 25.50 per litre to a hotel. How much money will he get from them?

Q9. The thickness of 15 notebooks is 22.5cm. find the thickness of one notebook.

Q10. A postman walks $5\frac{3}{5}$km in a day. How much distance will he cover in $5\frac{1}{2}$ days?

Q11. Find:

a) 2.73 ÷ 1.3 b) 11.2 × 0.15

Q8. Verify the following and also name the property:

i) (-25) × [(-7) + (-15)] = [(-25) × (-7)] + [(-25) × (-15)]

Q9. Find the value.

i) (-49) ÷ [(-48)+(-1)]
ii) [84 ÷ (-12)] ÷ 7

Q10. In a test (+ 5) marks are given for every correct answer and (-2) marks are given for every incorrect answer.

i) Rohan answered all questions and scored 24 marks though he got 8 correct answers.
ii) Smitha answered all questions and scored (-15) marks though he got 3 correct answers.
How many incorrect answers had they attempted?

Q11. In a class test containing 15 questions 4 marks are given for every correct answer and (1) marks are given for every incorrect answer.

i) Gokul attempts all questions but only 6 of his answers are correct. What is his total score?
ii) Neena gets 12 of her answers correct. What will be her score?

Q12. Simplify :

a) $(5\frac{1}{3} \times 5\frac{1}{4}) - (\frac{1}{6} \times 1\frac{1}{2})$
b) $(\frac{5}{7} \times 1\frac{2}{3}) + (1\frac{5}{7} \times \frac{1}{3})$

Q13. Rekha covered a distance of $15\frac{1}{10}$km. out of this she covered $5\frac{1}{4}$km by train, $6\frac{1}{2}$km by bus and rest by taxi. How many kilometers did she cover by taxi?

Q14. In a society, there were 100 members. Each member has to participate in some activity like art, basketball, cricket and football. $\frac{3}{10}$ of the members participated in art, $\frac{1}{10}$ in basketball and 17 played cricket. How many members participated in football?

- **NCERT Exemplar Questions : Chapter: Fractions and Decimals**
  1,2,3,4,5,19,59,61,63,67,72 , 78 , 87, 100, 101 , 106,111, 114
- **What can be added in place of a question mark?**

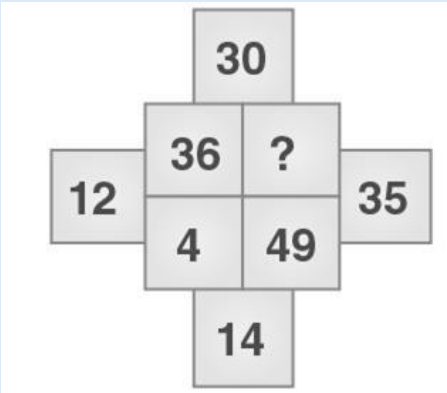

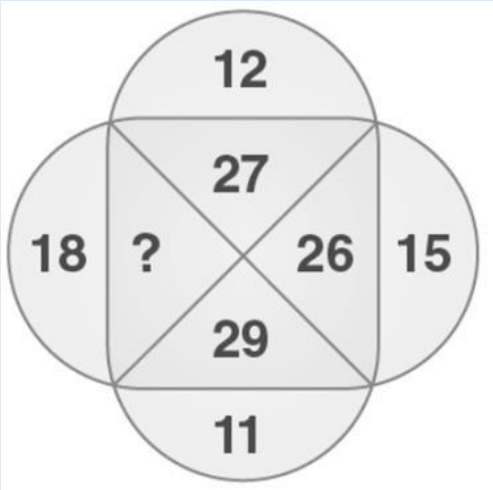

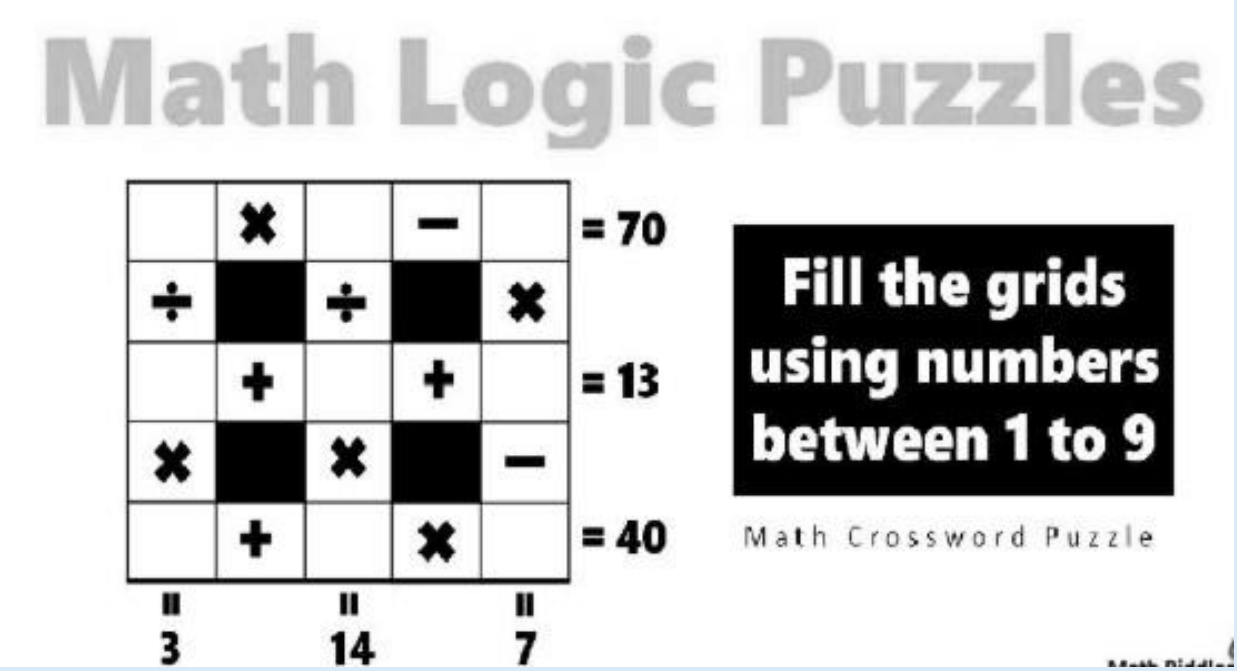

- **Your goal is to travel from the start to the end, by taking the correct pathways. Your products will guide you. Colour your path from start to end!**

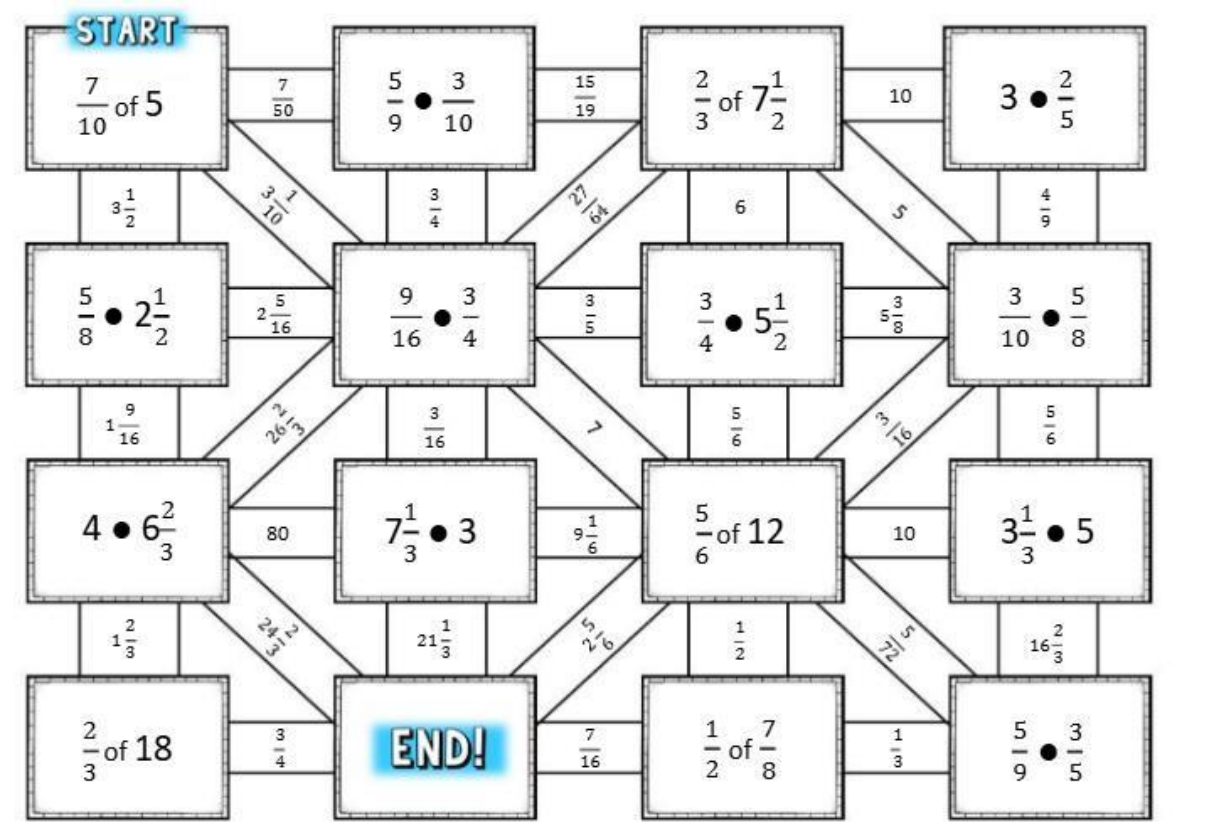

- **Plant a tree and water it daily, nurture it to ensure its survival.**

SCIENCE

1. Pure clean for pure living. Cleaning made fun, not a chore.

To make a bio enzyme cleaner, you'll need fruit or vegetable peels, jaggery (or brown sugar), water, and an airtight container. The ratio is generally 3 parts peels, 1 part jaggery, and 10 parts water. The mixture is fermented for a few months, producing a natural, eco-friendly cleaner.

Here's a more detailed breakdown:

Ingredients:

- **Fruit or Vegetable Peels:** Citrus peels (like lemon, orange, or grapefruit) are commonly used due to their natural cleaning properties. You can also use peels from other fruits or vegetables.
- **Jaggery (or Brown Sugar):** This acts as food for the beneficial bacteria that will ferment the mixture.
- **Water:** Use clean, filtered water.
- **Airtight Container:** A plastic container with a lid is ideal

nstructions:

1. **Cut and Mix:**

Cut the peels into small pieces and combine them with jaggery and water in an airtight container.

2. **Fermentation:**

- Keep the container in a shady place, away from direct sunlight.
- Open the lid daily for the first two weeks to release any trapped gas.
- After the first two weeks, open the lid and stir the mixture every 2-3 days.
- The fermentation process will take about 3 months.

3. **Strain and Store:**

Once the fermentation is complete (usually after 3 months), strain the liquid through a fine-mesh sieve or cheesecloth. Store the liquid in a clean, dark bottle.

Tips:

- Use fresh, organic peels for the best results.
- If you want to speed up the fermentation process, you can add a small amount of dry yeast (1/4 teaspoon) to the mixture.
- You can use the strained bio enzyme liquid as a cleaning solution by diluting it with water.
- The finished bio enzyme has a distinctive, slightly sweet, citrus smell.

2. **Science is infinite, and so is our ability to learn new things.Let's explore the fascinating world of science! Lets debunk some myths together.**
   Myths are often disproven by new evidence, contradictory experiments, or when a more accurate explanation emerges.

- **Example:**

Humans only use 10% of their brain. While this myth persists, brain imaging studies show that nearly all brain regions are active at some point, refuting this claim, <u>according to a study by Sri Krish International Teacher Training Institute</u>.
Create a 60 second reel to explain a science fact or debunking a myth.

3. Solve the given worksheet in a separate notebook.

Unscramble the following to form terms related to modes of nutrition.

(i) RASPAEIT (ii) ROPEHYTSAP (iii) TOROPHAUT (iv) SIBIOMSYS

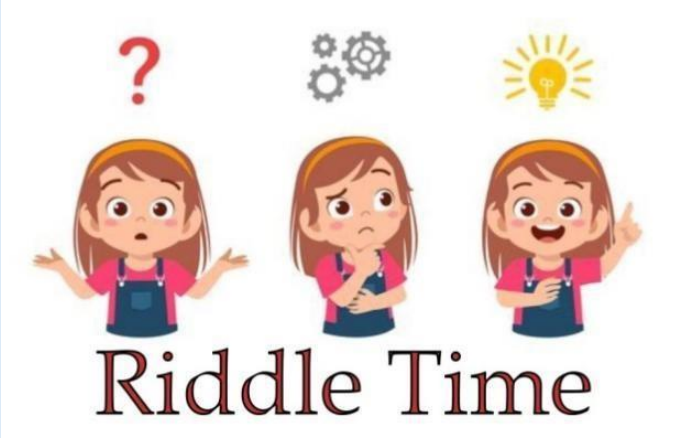

2. Can you give me a name? Solve each of the following riddles by writing the name of the organism and its mode of nutrition.

One riddle is solved to help you.

(a) I am tall but I cannot move. I am green and can prepare my own food. tree, Autotroph.

(b) I live in water; people keep me in an aquarium and feed me.

(c) I am small and I can fly. I disturb your sleep, bite you and suck your blood which is my food.

(d) I am white and soft. I grow well in the rainy season. Children pluck me from the ground and admire me. I absorb nutrients from decomposed dead parts of plants and animals in the soil.

3. Read the following passage carefully and answer the questions that follows it.

Bile juice is stored in a sac called, gall bladder, located near its organ of secretion, liver. The gall bladder releases the bile juice into the small intestine whenever food reaches there. Though bile juice is devoid of any digestive enzymes, it is required for the digestion of fats. The fats cannot be digested easily because they are insoluble in water and are present as large globules. Bile juice breaks down big fat droplets into smaller droplets. These are then easily digested by the enzymes released from the pancreas.

(a) Which organ secretes the bile juice?

(b) Why is digestion of fats difficult as compared to that of other nutrients?

(c) How does bile juice help in digestion of fat?

(d) Where is the digestion of fat completed?

(e) Does bile juice digest fat completely?

4. Documentaries/Web resources:

These materials would need an internet connection. They are generally short (< 15 minutes) videos. However, few of them can be long. Watch the longer ones with a break every 20 minutes or so.

1. How simple ideas lead to scientific discoveries
2. Space documentary: Voyager Space Probes
3. You can explore this web site to know about solar system planets and other objects in solar system: The Nine Planets
4. About gravity: How far would you have to go to escape gravity?
5. Learn about Mars Curiosity Rover
6. What is fire: Is fire a solid, a liquid, or a gas?
7. Why wash hands? How soap kills the corona virus
8. On birth of Earth
9. Microbes and antibiotic: What causes antibiotic resistance?

Write your observations in a separate note book.

SST

Dear Students,
As we approach the holidays, it's time to embark on an exciting journey of exploration and creativity! For your holiday homework assignment in Social Science, I'm thrilled to announce the following three projects.
Out of these three you can do any two of your choice.

Topic: "Indian Constitution: Rights and Duties of a Student"

1. Introduction

1. What is a Constitution?
2. Who made the Indian Constitution?
3. Why is the Constitution important?

2. Fundamental Rights

1. What are Fundamental Rights?
2. Write any four Fundamental Rights.
3. What is the Right to Education?

3. Fundamental Duties

1. What are Fundamental Duties?
2. Write four main duties of students.
3. Why should we follow our duties?

4. Rights vs Duties

1. What is the difference between Rights and Duties?
2. Give one example from school life.

5. Conclusion

1. What does the Constitution teach us?
2. Why is it important for students to follow their duties?

2. Make A Model Museum

Steps for Making a Model Museum:

1. Plan the Layout:

Decide on the space/structure (a box, cardboard display, or miniature room setup).

Create sections or galleries for different artifacts or topics.

Make a blueprint sketch of your layout before building.

2. Create Artifacts/Models:

Use clay, cardboard, , recycled materials, or 3D printed parts.

Make miniature items: weapons, tools, sculptures, coins, maps, documents, photos.

Label each artifact with a title and short description.

3: Prepare Display Board Make informative charts explaining the history, significance, and facts.

Include timelines, maps, flowcharts.

4: Design the Museum Structure

Create a model building with entrance, exit, and galleries.

Use shoeboxes, cardboard boxes for the building.

Add pillars, gates, walls, and walkways

5: Add Lights and Movement (Optional)

Use fairy lights or LED lights to highlight areas.

You can use small motors (DC) for moving parts like rotating platforms.

Reference https://images.app.goo.gl/mrnismAUWQXriZvU7

3. Rainwater Harvesting – Save Water Save Life

Instructions for Students

1. Use a clean A3 or chart paper.
2. Write the **title in bold, colourful letters** at the top.
3. Use **neat and clear handwriting**.
4. Draw **relevant and properly labelled diagrams/pictures**.
5. Use **colours, sketches, and borders** to make the project attractive.
6. Keep the work **well-organized, neat, and tidy**.
7. Write your **Name, Class, Section, and Roll Number** at the bottom right corner.

8. Add **help lines / information boxes / reference points** to make your project more informative and easy to understand.

1. Rainwater Harvesting – Save Water Save Life

Include:

- Diagram of a house collecting rainwater
- Pipes and storage tank
- Garden or reuse system
- Labels like “Collection”, “Storage”, “Reuse”
- Help box: *“Rainwater harvesting helps in saving groundwater and preventing water shortage.”*
- Slogan: *“Save Water, Secure Future”*

……

General Instructions

- Do all work neatly in a separate notebook or project file.
- Write answers in clear and structured form.
- Use headings, subheadings, and bullet points where needed.
- Draw and label diagrams wherever required.
- Paste relevant pictures to make the work attractive.
- Write in your own words; avoid direct copying.
- Submit the assignment after summer vacation.

General Knowledge (GK)

Q.1

Write short notes on any one:

- Fundamental Rights of India
- Indian Constitution

Q.2

Write the names of:

- 5 Indian freedom fighters and their contributions
- 5 national symbols of India with their significance

Q.3

Write names of:

- 5 world countries and their capitals
- 5 international organizations (like UN, WHO etc.)

Q.4

Prepare a short project on “Renewable Sources of Energy” and explain:

- Solar energy
- Wind energy
- Hydro energy
- Importance of renewable energy

Q.5

Write 8–10 lines on any one topic:

- Climate change
- Global warming
- Importance of education

Computer

Q.1

Explain the “Generations of Computers” in detail:

- First Generation
- Second Generation
- Third Generation
- Fourth Generation
- Fifth Generation

Q.2

Draw and explain the block diagram of a computer system. Write functions of each part.

Q.3

Write short notes on:

- Internet
- Artificial Intelligence (AI)
- Cyber Security

Q.4

What is MS Excel? Explain its features and uses in daily life (at least 5 points).

Q.5

Draw and explain Input, Output, and Storage devices with examples.